Baumer
Passion for Sensors

Incremental encoders

# OG 9

Solid shaft with EURO flange B10

25...5000 pulses per revolution

## Overview

- Encoder with solid shaft ø11 mm
- Optical sensing method
- EURO flange B10
- Output stage HTL with power linedriver
- Output stage TTL with regulator UB 9...26 VDC
- Operating temperature up to +100 °C

## Technical data

| Technical data - electrical ratings | |
|---|---|
| Voltage supply | 9...30 VDC<br>5 VDC ±5 %<br>9...26 VDC |
| Consumption w/o load | ≤100 mA |
| Pulses per revolution | 25 … 5000 |
| Phase shift | 90 ° ±20° |
| Duty cycle | 40…60 % |
| Reference signal | Zero pulse, width 90° |
| Sensing method | Optical |
| Output frequency | ≤120 kHz<br>≤300 kHz (on request) |
| Output signals | K1, K2, K0 + inverted |
| Output stages | HTL-P (power linedriver)<br>TTL/RS422 |
| Interference immunity | EN 61000-6-2 |
| Emitted interference | EN 61000-6-3 |
| Approval | CE<br>UL approval / E217823 |
| **Technical data - mechanical design** | |
| Size (flange) | ø115 mm |
| Shaft type | ø11 mm solid shaft |

| Technical data - mechanical design | |
|---|---|
| Admitted shaft load | ≤250 N axial<br>≤350 N radial |
| Flange | EURO flange B10 |
| Protection EN 60529 | IP 55 |
| Operating speed | ≤12000 rpm (mechanical) |
| Operating torque typ. | 1 Ncm |
| Rotor moment of inertia | 280 gcm² |
| Material | Housing: aluminium die-cast<br>Shaft: stainless steel |
| Operating temperature | -30...+100 °C<br>-25...+100 °C (>3072 pulses) |
| Resistance | IEC 60068-2-6<br>Vibration 10 g, 10-2000 Hz<br>IEC 60068-2-27<br>Shock 100 g, 6 ms |
| Corrosion protection | IEC 60068-2-52 Salt mist<br>for ambient conditions C4 according to ISO 12944-2 |
| Explosion protection | II 3 G Ex ec IIC T4 Gc (gas)<br>II 3 D Ex tc IIIB T135°C Dc (dust)<br>(only with option ATEX) |
| Connection | Terminal box |
| Weight approx. | 980 g |

2023-08-22 The product features and technical data specified do not express or imply any warranty. Technical modifications subject to change.

## Terminal assignment

**View A** *(see dimension)*
Connecting terminal terminal box

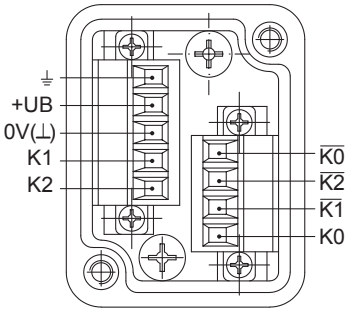


## Terminal significance

| | |
|---|---|
| +UB | Voltage supply |
| 0V (⊥) | Ground |
| ⏚ | Earth ground (housing) |
| K1 | Output signal channel 1 |
| $\overline{K1}$ | Output signal channel 1 inverted |
| K2 | Output signal channel 2 (offset by 90° to channel 1) |
| $\overline{K2}$ | Output signal channel 2 inverted |
| K0 | Zero pulse (reference signal) |
| $\overline{K0}$ | Zero pulse inverted |

## Output signals

**HTL/TTL**
At positive rotating direction *(see dimension)*

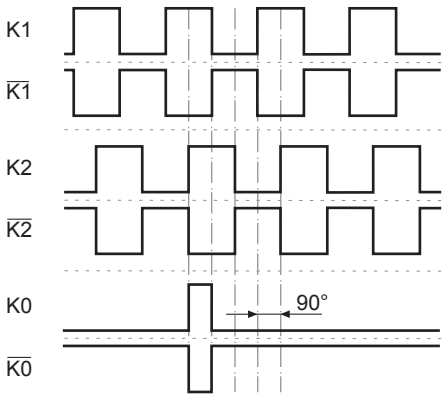


2023-08-22 The product features and technical data specified do not express or imply any warranty. Technical modifications subject to change.

# OG 9

Solid shaft with EURO flange B10

25...5000 pulses per revolution

## Dimensions

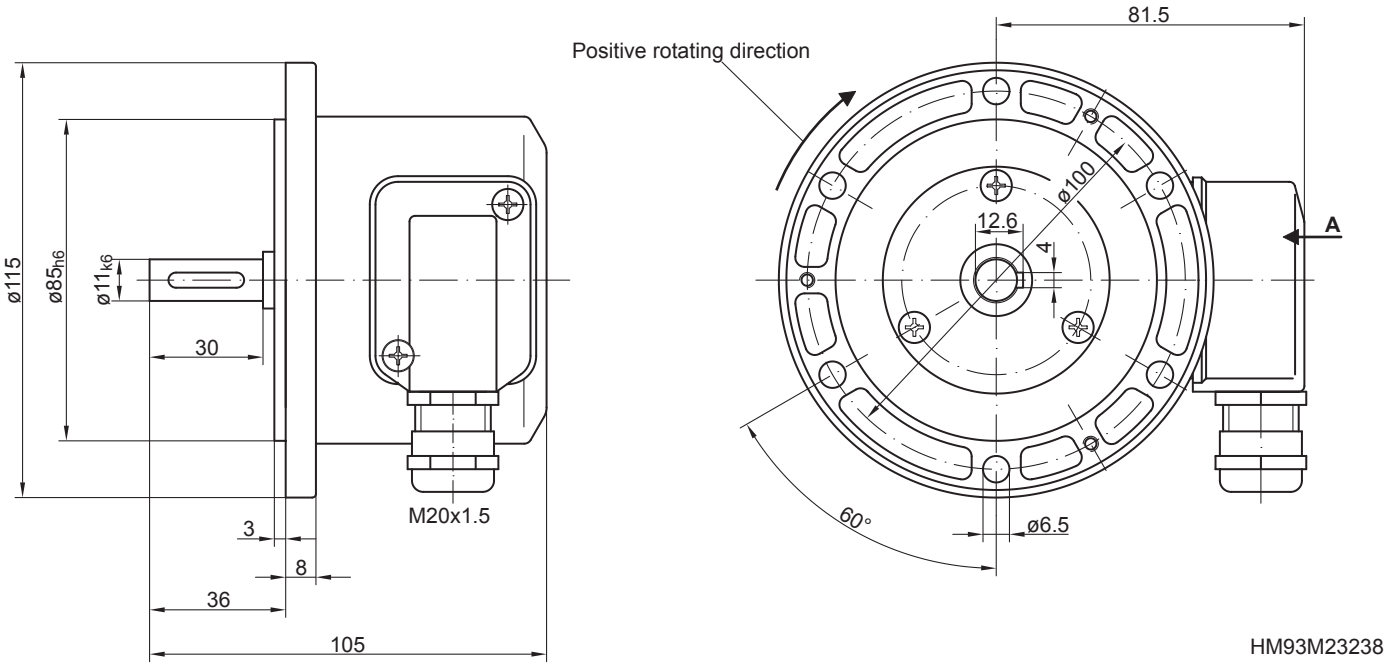


2023-08-22 The product features and technical data specified do not express or imply any warranty. Technical modifications subject to change.

# OG 9

Solid shaft with EURO flange B10
25...5000 pulses per revolution

## Ordering reference

| | OG9 | DN | #### | ### |
|---|---|---|---|---|
| **Product** | | | | |
| Incremental encoder | OG9 | | | |
| **Output signals** | | | | |
| K1, K2, K0 | | DN | | |
| **Pulse number**(1) | | | | |
| 25 | | | 25 | |
| 120 | | | 120 | |
| 128 | | | 128 | |
| 180 | | | 180 | |
| 256 | | | 256 | |
| 360 | | | 360 | |
| 500 | | | 500 | |
| 512 | | | 512 | |
| 720 | | | 720 | |
| 1000 | | | 1000 | |
| 1024 | | | 1024 | |
| 1250 | | | 1250 | |
| 2048 | | | 2048 | |
| 2500 | | | 2500 | |
| 3072 | | | 3072 | |
| 4096 | | | 4096 | |
| 5000 | | | 5000 | |
| **Voltage supply / output stage** | | | | |
| 9...30 VDC / output stage HTL with inverted signals | | | | I |
| 5 VDC / output stage TTL with inverted signals | | | | TTL |
| 9...30 VDC / output stage TTL with inverted signals | | | | R |

(1) Other pulse numbers on request.

## Accessories

| **Mounting accessories** |
|---|
| Spring disk coupling K 35 (shaft ø6...12 mm) |
| Spring disk coupling K 50 (shaft ø11...16 mm) |
| Spring disk coupling K 60 (shaft ø11...22 mm) |

2023-08-22 The product features and technical data specified do not express or imply any warranty. Technical modifications subject to change.