Baumer
Passion for Sensors

Conductivity measurement

CombiLyz AFI4/AFI5

Inductive conductivity transmitter

EN Operating Instructions 3

Type plate

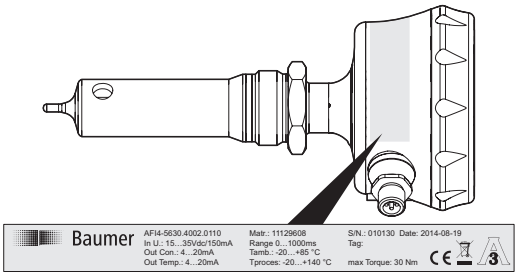

Type	▪ Type of sensor
Matr.	▪ Material number
In	▪ Input voltage and power consumption
Out	▪ Conductivity/concentration/temperature, customer-specific ▪ Maximum external load
Range	▪ Maximum range
Tamb	▪ Ambient temperature
Tproces	▪ Process temperature
S/N	▪ Serial number
Date	▪ Date of manufacture
	▪ Do not dispose of in household waste
	▪ Conformity with EU directives
	▪ Approvals, type-specific

Version	▪ Sensortyp
Matr.	▪ Materialnummer
In	▪ Eingangsspannung und Stromverbrauch
Out	▪ Leitfähigkeit/Konzentration/Temperatur, kundenspezifisch ▪ Maximale externe Last
Bereich	▪ Maximalbereich
Tamb	▪ Umgebungstemperatur
Tproces	▪ Prozesstemperatur
S/N	▪ Seriennummer
Date	▪ Herstellungsdatum
	▪ Nicht im Hausmüll entsorgen
	▪ Konformität mit EU-Richtlinien
	▪ Zulassungen, typenspezifisch

Version	▪ Type de capteur
Matr.	▪ Réf. mat.
In	▪ Tension d'entrée et consommation électrique
Out	▪ Conductivité/Concentration/ Température, spécifiques au client ▪ Charge externe maximale
Plage	▪ Plage maximale
Tamb	▪ Température ambiante
Tproces	▪ Température de processus
S/N	▪ Numéro de série
Date	▪ Date de fabrication
	▪ Ne pas jeter avec les ordures ménagères
	▪ Conformité avec les directives européennes
	▪ Autorisations, selon le type

Table of contents

1. Safety 3
2. Construction and function 4
3. Symbols in warning signs 4
4. Transport and storage 5
5. Mounting 5
6. Approvals 8
7. Electrical connection 8
8. Configuration 11
9. Operation 13
10. Troubleshooting 14
11. Cleaning, maintenance and repair 14
12. Disposal 14
13. Accessories 14
14. Technical data 14
15. Configuration overview 16

1. Safety

Intended use
The sensor must be used solely for conductivity measurements of liquids.
The sensor must only be used for media against which the housing material and sensor tip are resistant.

Staff qualification
Only employ staff who are trained for the activities described. This applies in particular to assembly, installation, configuration and troubleshooting.
Make sure that the staff have read and understood these instructions.

Electrical connection and EMC
All electrical wirings must comply with local standards and connections must be made according to the connection diagrams.

Technical condition
Only use the sensor in perfect technical condition.
Only use Baumer accessories.
Baumer will accept no liability for other manufacturers' accessories.
Only the DFON display may be replaced and only Baumer may perform repairs on the device.

Operation
The power supply and environmental conditions must comply with the specifications of the device. The device is not approved for electrical installations in explosion hazard areas.
Before switching the device on and off, possible effects on other equipment and the processing system must be checked.

Risk of burns from hot media
During operation the sensor housing may warm up to over 50 °C. When working with hot media provide protection against burns.

2. Construction and function

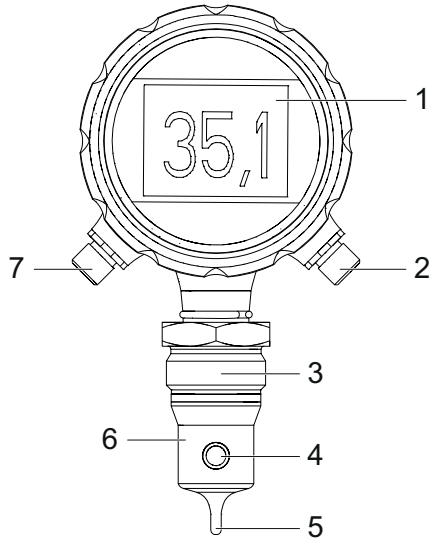

Fig. 1. Construction

1 DFON display
2 Connection for temperature and relay signal
3 Thread for mounting the AFIx
4 Hole for medium (conductivity measuring)
5 Tip with temperature sensor
6 Measuring cell
7 Connection for power supply, conductivity/ concentration signal and IO-Link

The CombiLyz AFIx consists of a conductivity sensor, temperature sensor and a transmitter. The device measures conductivity/concentration and temperature of liquid media.
The CombiLyz AFIx can be programmed via the touch screen display, FlexProgrammer 9701 or an IO-Link Master. During operation, the display shows information regarding measured values, alarms and other data as specified during setup. The 2 connectors are used to transfer sensor data, alarms, control signals and programming data.

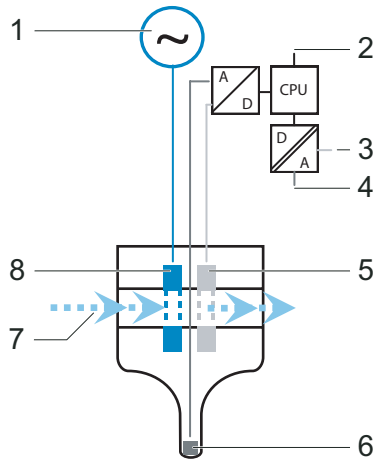

Fig. 2. Measuring principle

1 Oscillator
2 Range setting input S1 and S2
3 Conductivity/concentration out (4 … 20 mA) + IO-Link
4 Temperature out (4 … 20 mA)
5 Secondary coil
6 Pt100
7 Medium
8 Primary coil

Around the hole inside the measuring cell there are 2 coils. The primary coil is supplied with AC voltage and the secondary coil measures the inducted current in the liquid medium inside the hole. The temperature of the liquid medium is measured via a Pt100 sensor in the tip of the measuring cell. This allows temperature compensation of the conductivity signal.

3. Symbols in warning signs

Symbol	Warning term	Explanation
⚠	**DANGER**	In situations which cause death or serious injuries.
	WARNING	In situations which can cause death or serious injuries.
	CAUTION	In situations which can cause light or medium injuries.
–	**NOTICE**	For material damage.

4. Transport and storage

- Check packaging and sensor for damage.
- In the event of damage: Do not use sensor.
- Store sensor where it will be secure against shock.
  Storage temperature: –30 … 80 °C
  Relative humidity: < 98 %

5. Mounting

5.1 Mounting conditions

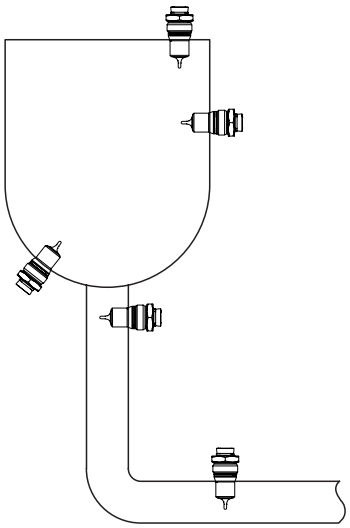

Fig. 3. Mounting locations

The sensor can be mounted at any point on the vessel or pipe.

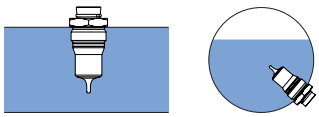

Fig. 4. Fully submerged in medium

For correct operation the sensor must be fully submerged in the medium.

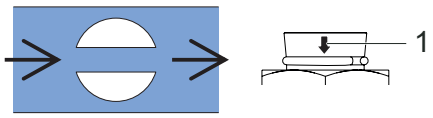

Fig. 5. Mounting in flow direction

To allow a sufficient self-cleaning to happen, the hole through the sensor must be oriented in the flow direction. Arrows (1) on the sensor above the connection mark the orientation of the hole.

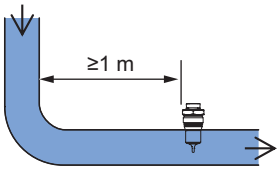

Fig. 6. Recommended distance from bend

To avoid problems due to turbulence in flowing media, Baumer recommends to mount the sensor in a distance of at least 1 m from a bend.

Some weld-in sleeves (e.g. ZPW3-526) must be mounted in the correct angle to allow automatic draining.

Example of mounting with weld-in sleeve ZPW3-526

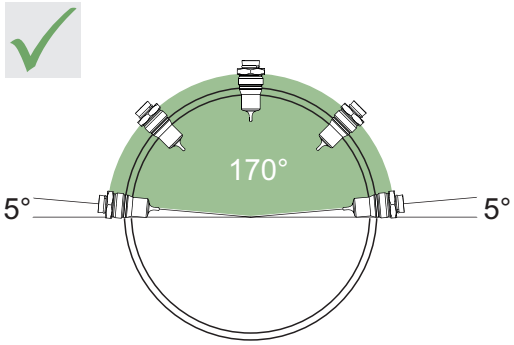

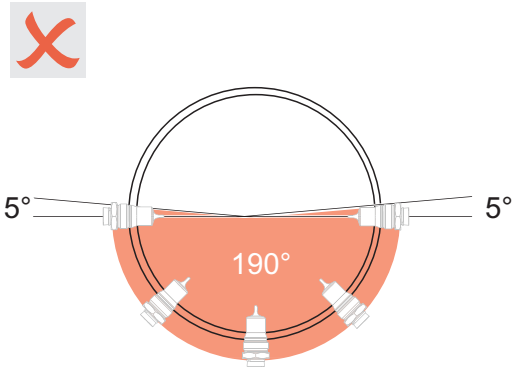

5.2 Changing orientation of the display

Depending on the mounting location and orientation of the sensor, the facing and orientation of the display can be adjusted accordingly.

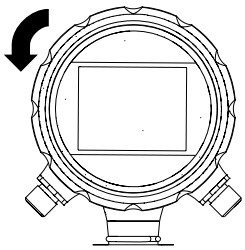

- Open housing by unscrewing the cover.

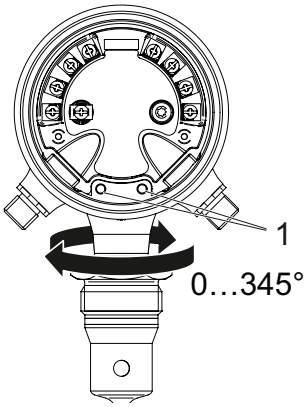

- Lift display from housing.
- If desired, turn head of sensor:
  - Loosen the 2 screws (1) inside with a 2 mm Allen key.
  - Turn head of sensor to the left (max. 345°).
  - Tighten the 2 screws (1) inside with a 2 mm Allen key.

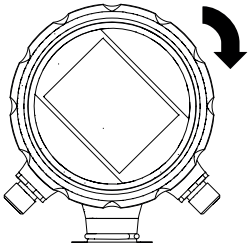

- Make sure not to damage connecting ribbon cable and put the display back in housing in the desired orientation.
- Close housing by screwing on the cover.

5.3 Mounting and dismounting the AFI5 cable

Mounting the AFI5 cable

- To plug the cable in, align the 2 red points. A locking mechanism ensures that the cable cannot be pulled out unintentionally.

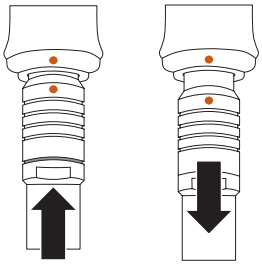

Dismounting the AFI5 cable

- Press both ends of the locking mechanism together.
- Pull the cable out.

5.4 Mounting the AFIx

WARNING
Danger to health from contaminated medium

- Only use weld-in sleeves or adapters from Baumer.
- Do not seal the process connections with Teflon tape (PTFE) or elastomer.
- Welding work must only be carried out by welders trained in the area of hygiene.

✓ Hole for mounting the sensor is easily accessible and dry.
✓ Vessel is drained.
✓ Mounting location and sensor orientation meet the conditions in chapter “5.1 Mounting conditions” on page 5.

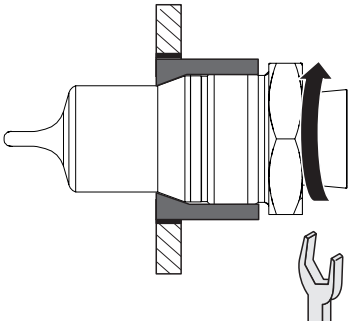

- Mount weld-in sleeve or adapter as follows:
  - 3-A mark or arrow points upwards
  - Leakage hole points downwards
  - Hygienically and internally flush
- Grind welding to Ra ≤ 0.8.
- Screw in sensor.
  Tightening torque: 20 … 25 Nm

- Check leak-tightness of the sleeve.
- Check leak-tightness of the cable glands or M12 plug.
- Ensure that the housing cover is fastened properly.

Example of mounting with weld-in sleeve ZPW2-521

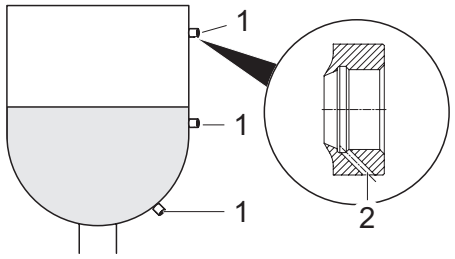

1 ZPW2-521
2 Leakage hole

6. Approvals

The EHEDG certificate is only valid in connection with the appropriate installation parts. These are marked with the "EHEDG Certified" logo.

The 3-A Sanitary Standard requirements are only met with the appropriate installation parts. These are marked with the 3-A logo.

Approved by Underwriter Laboratories (UL) for use in the USA and Canada as an industrial control device.

For more information on approvals and certification, refer to the product page on www.baumer.com.

7. Electrical connection

7.1 External connections

✓ A voltage supply of 15 to 35 V DC is provided.
- Switch off supply voltage.
- Connect the sensor in accordance with pin assignment.

NOTICE
Damage to sealing or connector!
Tightening the knurl with too much force can damage the connector or the O-ring inside the cable gland.
- Only tighten the knurl by hand with a maximum torque of 0.6 N.
- Do not use any tools when tightening the knurl.

M12-A, 4-pin

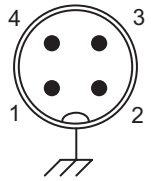

M12-A, 5-pin

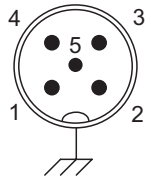

1 Left side connection
2 Right side connection

M12-A, 4-pin

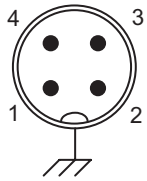

M12-A, 8-pin

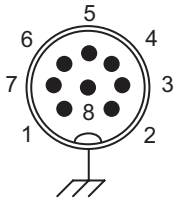

Left side connection (front view)

M12-A, 4-pin			
Function			**Pin**
+Vs	Power supply +	15 … 35 V DC	1
GND (0 V)	Power supply –	15 … 35 V DC	3
Iout1 +	Conductivity +	4 … 20 mA	4
Iout –	Conductivity –	4 … 20 mA	2

M12-A, 5-pin, IO-Link			
Function			**Pin**
+Vs	Power supply +	15 … 35 V DC	1
GND (0 V)	Power supply –	15 … 35 V DC	3
Iout1 +	Conductivity +	4 … 20 mA	5
Iout –	Conductivity –	4 … 20 mA	2
IO-Link	IO-Link / SW		4

M12-A, 5-pin, HART®			
Function			**Pin**
+Vs	Power supply +	15 … 35 V DC	1
GND (0 V)	Power supply –	15 … 35 V DC	3
Iout1 +	Conductivity +	4 … 20 mA	4
Iout –	Conductivity –	4 … 20 mA	2
IO-Link	IO-Link / SW		5

Electrical connection with cable gland

Connector type	Cable diameter
M16 plastic	5 … 10 mm
M16 stainless steel	5 … 9 mm
M20 plastic	8 … 13 mm
M20 stainless steel	11 … 13 mm

Right side connection (front view)

M12-A, 4-pin			
Function			**Pin**
Iout2 +	Temperature +	4 … 20 mA	4
Iout –	Temperature –	4 … 20 mA	2
S1	External input	n. c. / 24 V DC	1
S2	External input	n. c. / 24 V DC	3

M12-A, 8-pin			
Function			**Pin**
Iout2 +	Temperature +	4 … 20 mA	2
Iout –	Temperature –	4 … 20 mA	7
S1	External input	n. c. / 24 V DC	1
S2	External input	n. c. / 24 V DC	8
R11	Relay 1		5
R12	Relay 1		6
R21	Relay 2		3
R22	Relay 2		4

Iout– is internally connected as a common minus for both conductivity/concentration and temperature output (4 … 20 mA).

7.2 Internal connections

Electrical connections on the AFIx transmitter

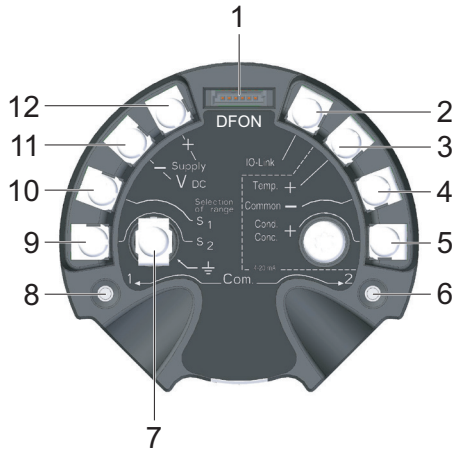

1	Display (UnitCom)
2	IO-Link
3	Temperature +
4	Common –
5	Conductivity/concentration +
6	Com 2
7	Ground
8	Com 1
9	S2
10	S1
11	Supply –
12	Supply +

When using a cable gland and a screened cable, the ground connection (7) must be connected to the cable screen.

Electrical connections on the display with relay output

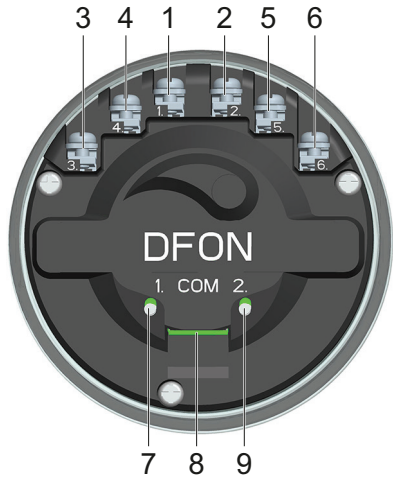

1	Not connected
2	Not connected
3	Relay 21
4	Relay 22
5	Relay 11
6	Relay 12
7	Com 1
8	UnitCom
9	Com 2

7.3 Connecting FlexProgrammer 9701

Connection to transmitter

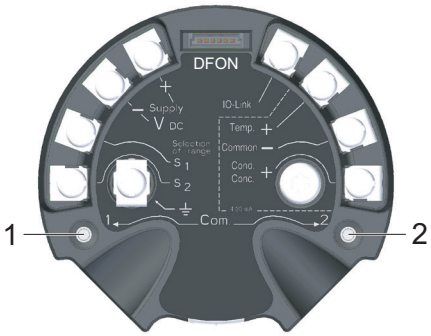

1 Com 1
2 Com 2

- Open the housing by unscrewing the cover.
- Connect the red clip to Com 1.
- Connect the black clip to Com 2.

Connection to DFON display

1 Com 1
2 Com 2

- Open the housing by unscrewing the cover.
- Connect the red clip to Com 1.
- Connect the black clip to Com 2.

8. Configuration

8.1 Configuration via touch screen

- Configure temperature compensation.

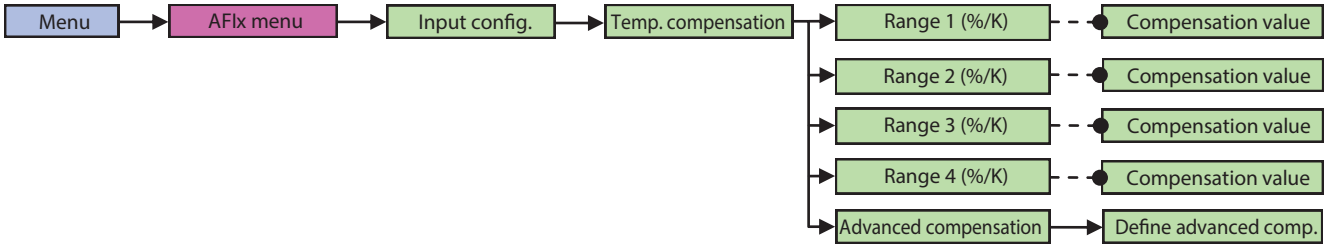

▶ Select conductivity range.

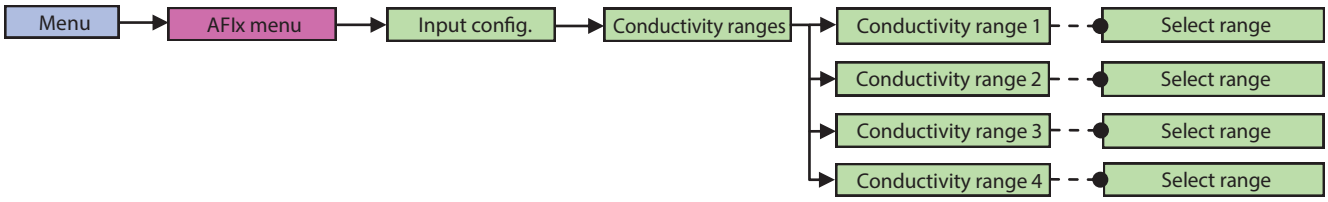

▶ If desired, select or define further settings:
- Concentration output
- Display colors
- Warnings
- Relays

8.2 Configuration via FlexProgram

✓ FlexProgrammer 9701 is connected.

Configuration options with the AFIx transmitter:
- Select HART or IO-Link mode
- Configure switch output
- Configure temperature compensation
- Select temperature source for compensation
- Select conductivity range
- Set current limits
- Select concentration output
- Configure media screen
- Make a data logging
- Calibrate sensor and media

Configuration options with the DFON display:
- Select screen layout
- Select backlight intensity
- Define relays
- Define warning and error indication

Calibrating the sensor (conductivity/temperature)
✓ AFIx is powered up
✓ The used medium has a known conductivity/temperature
▶ Adjust an offset for the conductivity/temperature for the sensor.
▶ If necessary, reset the sensor offset in FlexProgram.

Calibrating a medium
For the different ranges it is possible to calibrate the medium by calculating the temperature compensation after 3 measurements.
✓ Calibration is done in a controlled environment
✓ AFIx is powered up
▶ Have the sensor tip immersed in the medium for 1 minute before measuring the conductivity.
▶ Measure the conductivity at 3 different temperatures using the same medium.
▶ Calculate the temperature compensation for the medium.

For further information, refer to the HELP section in FlexProgram.

8.3 Configuration via IO-Link Master

Switch setup, conductivity ranges, output mode etc. can be configured via IO-Link with an IO-Link Master.
Note: The sensor may not be connected directly to a class B master.

- Connect IO-Link Master to sensor.
- Connect IO-Link to PC.
- Set parameters.

For a detailed description of the parameter and process data for the IODD, refer to the AFI4/AFI5 product page at www.baumer.com.

9. Operation

9.1 Display views

Selectable display views

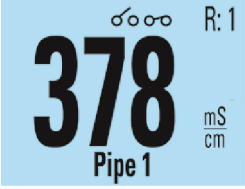

Conductivity/ concentration and tag

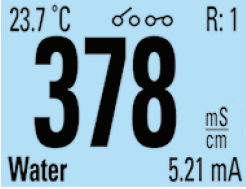

Conductivity and details

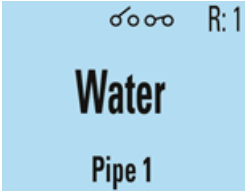

Media label and tag

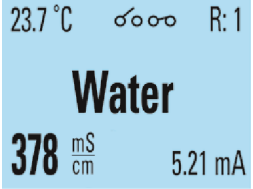

Medial label and details

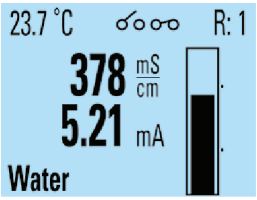

Conductivity/ concentration bar

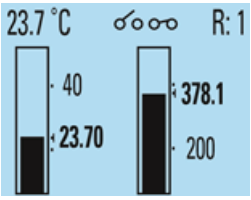

Conductivity/ concentration and temperature bar

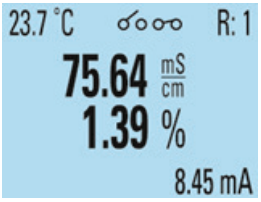

Conductivity and concentration/ temperature

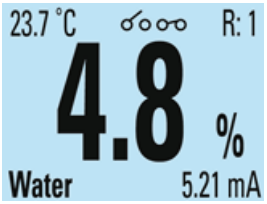

Concentration and details

Visual alerts and colors

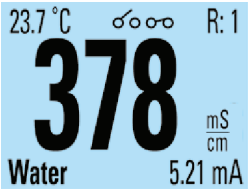

White background

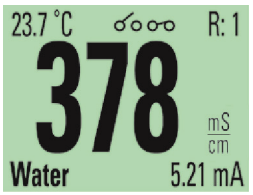

Green background

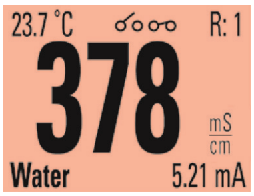

Red background

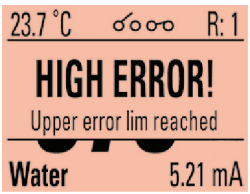

Red background and error indication

10. Troubleshooting

Fault	Cause	Action
Display is off and no signals from transmitter	Sensor not correctly connected	▶ Check plug and power supply.
	Device error	▶ Dismount and return sensor.
Display is on but no signals from transmitter	Short circuit	▶ Remedy short circuit.
Display is off but there are signals from transmitter	UnitCom cable not connected	▶ Connect the UnitCom cable between display and transmitter.
Display does not show the correct data	Unsuitable media characteristics	▶ Check signal quality with FlexProgrammer 9701.

11. Cleaning, maintenance and repair

Cleaning
- Clean, disinfect or sterilize sensor as needed (CIP/SIP).

Maintenance
Regular maintenance is not required.

Repair
Do not repair the sensor yourself.
- Send damaged sensor to Baumer.

12. Disposal

- Do not dispose of in household waste.
- Separate materials and dispose of in compliance with nationally applicable regulations.

13. Accessories

For adapter and other accessories, refer to www.baumer.com.

14. Technical data

Conductivity performance characteristics			
Conductivity	14 selectable ranges	Max. measuring error	▪ ± 1.0 % FSR, 0 ... 1 mS/cm to 0 ... 500 mS/cm ▪ ± 1.5 % FSR, 0 ... 1000 mS/cm, ▪ ± 1.5 % FSR, 0 ... 500 µS/cm
Min. measurable conductivity	50 µS/cm		
Max. measuring span	1000 mS/cm		
Min. measuring span	500 µS/cm	Reference conditions for max. measuring error	Sensor incl. transmitter at 25 °C ambient temperature

Conductivity performance characteristics	
Reference temperature	25 °C, adjustable
Repeatability	< 0.5% FSR, > 1 mS/cm
Compensated temperature range	–20 ... 150 °C
Temperature compensation	0.0 ... 5.0 % FSR/K, adjustable
Step response time, T90	≤ 2.0 s
Sample time	≤ 0.3 s
Temperature coefficient (factor of change in process temperature of 25 °C)	≤ 0.1 % FSR/K
Temperature coefficient (factor of change in process temperature of 25 °C) (0 ... 500 µS/cm)	≤ 0.3 % FSR/K

Temperature performance characteristics	
Temperature	Free programmable range
Measuring range	–20 ... 150 °C
Step response time, T90	≤ 15 s
Max. measuring error	± 0.4 K
Reference conditions for max. measuring error	Sensor incl. transmitter at 25 °C ambient temperature
Temperature coefficient (factor of change in process temperature of 25 °C)	▪ ≤ 0.5 % FSR/K, AFI4 ▪ ≤ 0.5125 % FSR/K, AFI5 with sensor cable 2.5 m ▪ ≤ 0.525 % FSR/K, AFI5 with sensor cable 5 m ▪ ≤ 0.55 % FSR/K, AFI5 with sensor cable 10 m

Process conditions	
Process temperature	–20 … 140 °C, permanent 140 ... 150 °C, max. t < 1 h
Process pressure	≤ 25 bar
SIP/CIP compability	< 60 min, at medium temperature up to 150 °C

Ambient conditions	
Operating temperature	–30 ... 80 °C, with DFON touch screen –40 ... 85 °C, without DFON touch screen
Degree of protection (EN 60529)	IP67 IP69K, with appropriate cable
Humidity	< 98 % RH, condensing
Insulation voltage	500 V AC
Vibration (sinusoidal) (EN 60068-2-6)	1.0 mm p-p (2 ...13.2 Hz), 0.7 g (13.2 ... 100 Hz), 1 octave / min.

Output signal	
Conductivity/ concentration	4 … 20 mA 4 … 20 mA + HART®
Temperature	4 … 20 mA
Relays	2 relays included in the display
Current rating	100 mA, max.
Interface	IO-Link 1.1 With HART® modem With FlexProgrammer 9701

Power supply	
Voltage supply	15 … 35 V DC 18 ... 30 V DC, with IO-Link
Power-up time	≤ 10 s, without DFON touch screen ≤ 16 s, with DFON touch screen

Factory settings			
Output mode	Conductivity	Temperature output	0 ... 150 °C
Conductivity range 1	0 ... 200 mS/cm	Output damping	0.0 s
Conductivity range 2	0 ... 20 mS/cm	Temperature compensation range 1–4	2.0 % FSR/K
Conductivity range 3	0 ... 2 mS/cm	Lower output current limit	3.7 mA
Conductivity range 4	0 ... 500 µS/cm	Upper output current limit	21.0 mA

15. Configuration overview

15.1 Measurement ranges and basic principles

Temperature dependence

Medium	% / K	Sensor setting	% / K
Acid	1.0 … 1.6	Factory setting	2.0
Base	1.8 … 2.2	Selectable range	0.0 … 5.0
Saline solution	2.2 … 3.0		
Neutral water	2.0		

Selectable conductivity ranges			
0 … 500 µS/cm	0 … 5 mS/cm	0 … 50 mS/cm	0 … 500 mS/cm
0 … 1 mS/cm	0 … 10 mS/cm	0 … 100 mS/cm	0 … 1 S/cm
0 … 2 mS/cm	0 … 20 mS/cm	0 … 200 mS/cm	
0 … 3 mS/cm	0 … 30 mS/cm	0 … 300 mS/cm	

Selectable concentration ranges

- NaOH (caustic soda)
  - 0 … 12 % by weight (0 … 90 °C)
  - 20 … 50 % by weight (0 … 90 °C)
- HNO_3 (nitric acid)
  - 0 … 25 % by weight (0 … 80 °C)
  - 36 … 82 % by weight (0 … 80 °C)
- Customer defined media (30 point lookup table)

Settings for the external input for range selection

Range	S1	S2
1	N.C.	N.C.
2	24 V DC	N.C.
3	N.C.	24 V DC
4	24 V DC	24 V DC

15.2 DFON menu structure

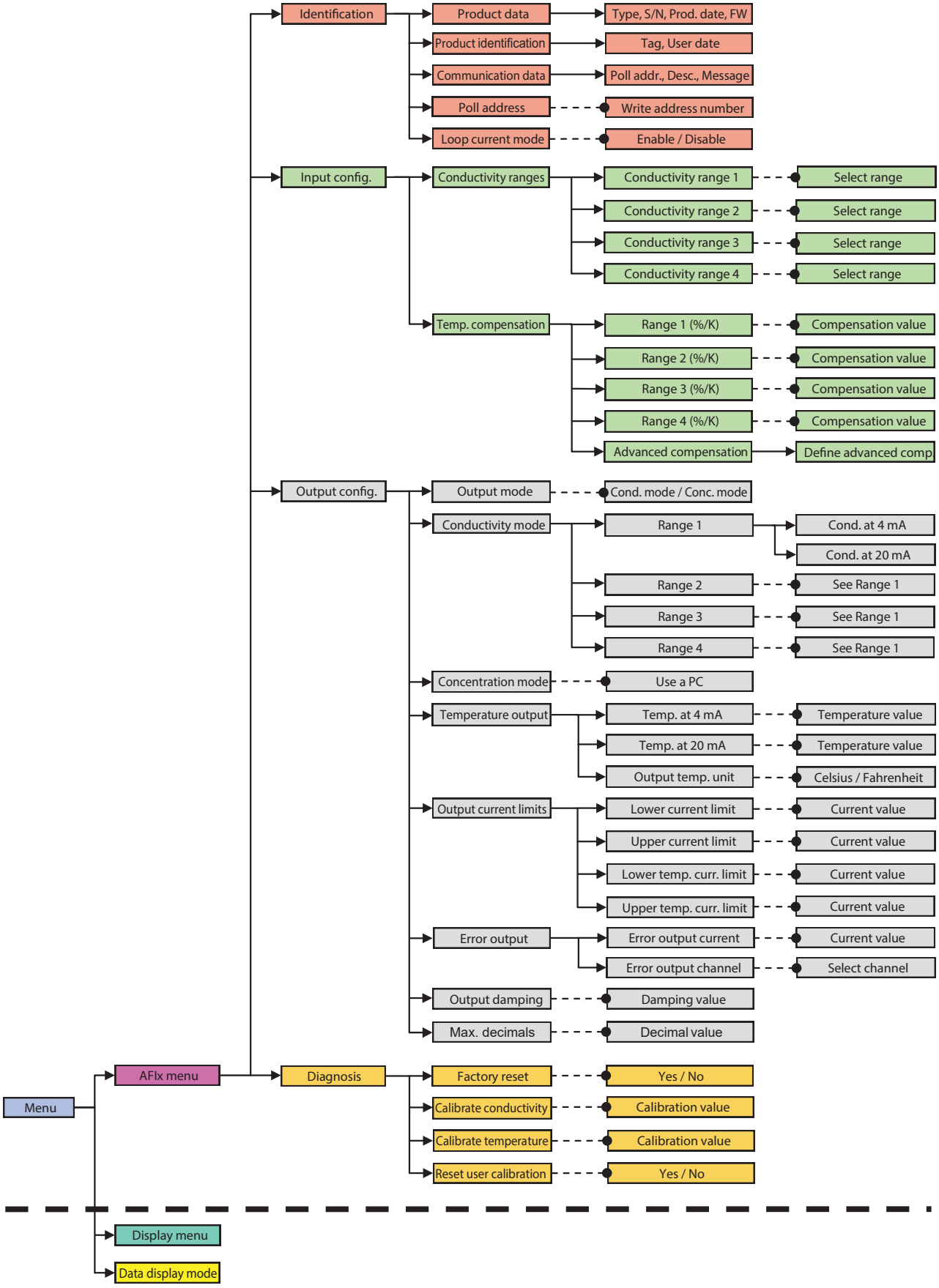

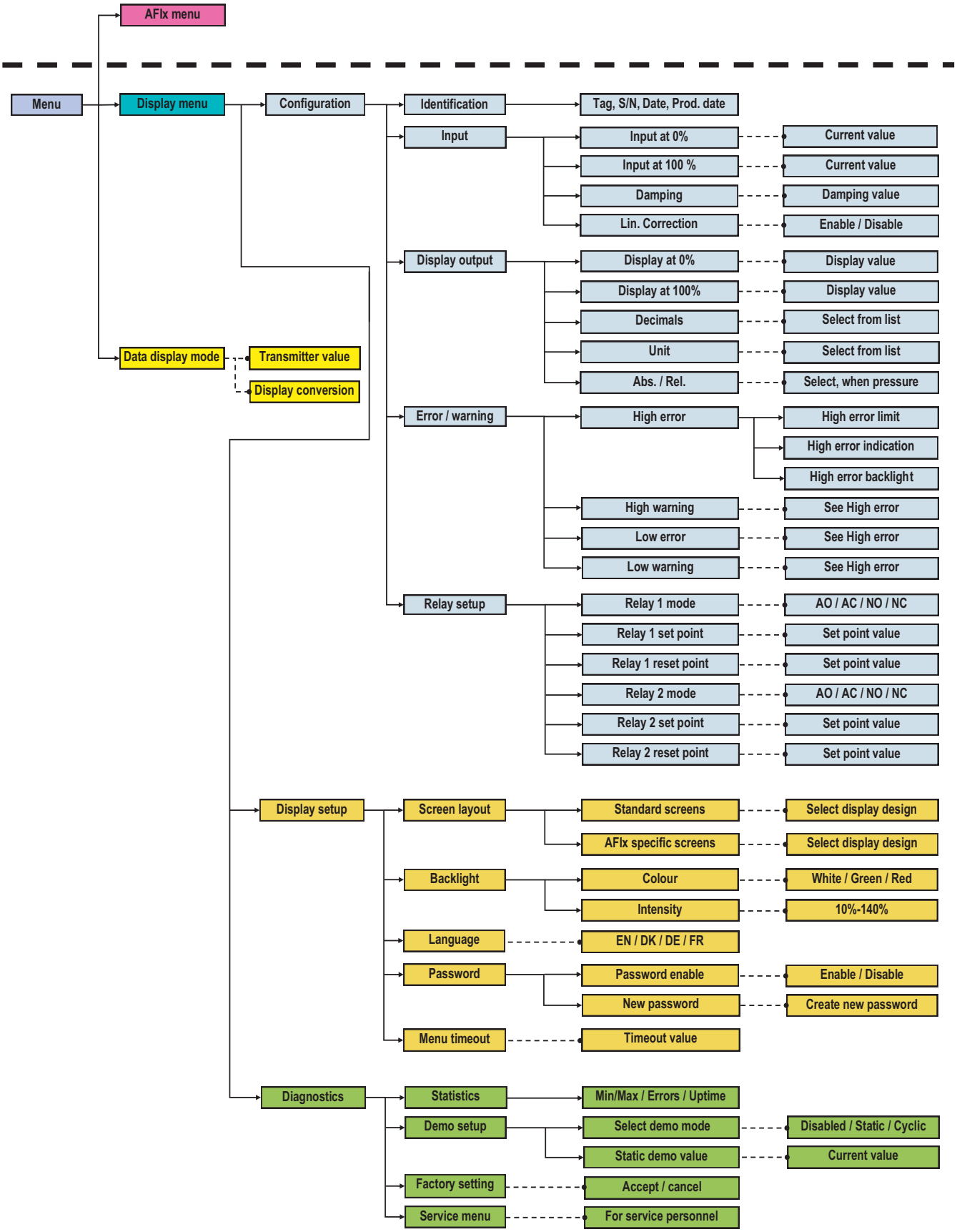
AFIx menu
Menu
Display menu
Configuration
Identification
Tag, S/N, Date, Prod. date
Input
Input at 0%
Current value
Input at 100 %
Current value
Damping
Damping value
Lin. Correction
Enable / Disable
Display output
Display at 0%
Display value
Display at 100%
Display value
Decimals
Select from list
Unit
Select from list
Abs. / Rel.
Select, when pressure
Data display mode
Transmitter value
Display conversion
Error / warning
High error
High error limit
High error indication
High error backlight
High warning
See High error
Low error
See High error
Low warning
See High error
Relay setup
Relay 1 mode
AO / AC / NO / NC
Relay 1 set point
Set point value
Relay 1 reset point
Set point value
Relay 2 mode
AO / AC / NO / NC
Relay 2 set point
Set point value
Relay 2 reset point
Set point value
Display setup
Screen layout
Standard screens
Select display design
AFIx specific screens
Select display design
Backlight
Colour
White / Green / Red
Intensity
10%-140%
Language
EN / DK / DE / FR
Password
Password enable
Enable / Disable
New password
Create new password
Menu timeout
Timeout value
Diagnostics
Statistics
Min/Max / Errors / Uptime
Demo setup
Select demo mode
Disabled / Static / Cyclic
Static demo value
Current value
Factory setting
Accept / cancel
Service menu
For service personnel